Introduction to FINITE ELEMENTS in ENGINEERING

FIFTH EDITION

Tirupathi R. Chandrupatla
Ashok D. Belegundu

Introduction to Finite Elements in Engineering

Thoroughly updated with improved pedagogy, the fifth edition of this classic textbook continues to provide students with a clear and comprehensive introduction to the fundamentals of the finite element method. New features include coverage of core topics – including mechanics and heat conduction, energy and Galerkin approaches, convergence and adaptivity, time-dependent problems, and computer implementation – in the context of simple 1D problems, before advancing to 2D and 3D problems; expanded coverage of reduction of bandwidth, profile and fill-in for sparse solutions, time-dependent problems, plate bending, and nonlinearity; over 30 additional solved problems; and downloadable MATLAB, Python, C, JavaScript, Fortran, and Excel VBA code, providing students with hands-on experience. Accompanied by online solutions for instructors, this is the definitive text for senior undergraduate and graduate students studying a first course in the finite element method, and for professional engineers keen to shore up their understanding of finite element fundamentals.

Tirupathi R. Chandrupatla has been Professor and Founding Chair of Mechanical Engineering at Rowan University, New Jersey since 1995. He received his B.E. from the National Institute of Technology, Warangal, his M.Tech. from the Indian Institute of Technology (IIT), and his Ph.D. from the University of Texas, Austin. He started his career as a design engineer with Hindustan Machine Tools (HMT), Bangalore and then taught at IIT. Professor Chandrupatla also taught at the University of Kentucky and Kettering University, before joining Rowan. In 2005, he received the Lindback Distinguished Teaching Award at Rowan University. He is also the author of *Quality and Reliability in Engineering* (Cambridge, 2009) and *Introduction to Finite Elements in Engineering* (2012). Professor Chandrupatla has broad research interests, which include design, optimization, manufacturing engineering, finite element analysis, and quality and reliability. He has published widely in these areas and serves as a consultant to industry. Professor Chandrupatla is a registered Professional Engineer and also a Certified Manufacturing Engineer.

Ashok D. Belegundu has been Professor of Mechanical Engineering at Pennsylvania State University since 1986. Prior to this, he taught at Kettering University, Michigan. He received his B.Tech. from IIT Madras and his Ph.D. from the University of Iowa. He has been a principal investigator on research projects involving optimization for several agencies, including the National Science Foundation, Army Research Office, NASA, SERC (UK), MacNeal-Schwendler Corporation, Gentex Corporation, and Ingersoll-Rand. He has organized two international conferences on optimization in industry and has authored or edited four books and written a chapter in a book. He has advised more than 50 graduate students. He has given short courses on finite elements and optimization to the Forging Industry Association, Hazleton Pumps, and Infosys (India). He has served as an associate editor for *AIAA Journal* and for *Mechanics Based Design of Structures and Machines*.

Introduction to Finite Elements in Engineering

Fifth Edition

Tirupathi R. Chandrupatla
Rowan University, New Jersey

Ashok D. Belegundu
Pennsylvania State University

CAMBRIDGE
UNIVERSITY PRESS

CAMBRIDGE
UNIVERSITY PRESS

University Printing House, Cambridge CB2 8BS, United Kingdom

One Liberty Plaza, 20th Floor, New York, NY 10006, USA

477 Williamstown Road, Port Melbourne, VIC 3207, Australia

314–321, 3rd Floor, Plot 3, Splendor Forum, Jasola District Centre, New Delhi – 110025, India

103 Penang Road, #05–06/07, Visioncrest Commercial, Singapore 238467

Cambridge University Press is part of the University of Cambridge.

It furthers the University's mission by disseminating knowledge in the pursuit of education, learning, and research at the highest international levels of excellence.

www.cambridge.org
Information on this title: www.cambridge.org/9781108841412
DOI: 10.1017/9781108882293

© Ashok D. Belegundu and Tirupathi R. Chandrupatla 2022

This publication is in copyright. Subject to statutory exception and to the provisions of relevant collective licensing agreements, no reproduction of any part may take place without the written permission of Cambridge University Press.

First published by Prentice-Hall 1990
Second edition 1996
Third edition 2002
Fourth edition 2012
Fifth edition by Cambridge University Press 2022

Printed in the United Kingdom by TJ Books Limited, Padstow Cornwall

A catalogue record for this publication is available from the British Library.

Library of Congress Cataloging-in-Publication Data
Names: Chandrupatla, Tirupathi R., 1944– author. | Belegundu, Ashok D., 1956– author.
Title: Introduction to finite elements in engineering / Tirupathi R. Chandrupatla, Rowan University, New Jersey, Ashok D. Belegundu, Pennsylvania State University.
Description: 5th edition. | Cambridge, United Kingdom ; New York, NY, USA : Cambridge University Press, 2022. | Includes bibliographical references.
Identifiers: LCCN 2021024618 (print) | LCCN 2021024619 (ebook) | ISBN 9781108841412 (hardback) | ISBN 9781108882293 (epub)
Subjects: LCSH: Finite element method. | Engineering mathematics.
Classification: LCC TA347.F5 C463 2022 (print) | LCC TA347.F5 (ebook) | DDC 620.001/51–dc23
LC record available at https://lccn.loc.gov/2021024618
LC ebook record available at https://lccn.loc.gov/2021024619

ISBN 978-1-108-84141-2 Hardback

Cambridge University Press has no responsibility for the persistence or accuracy of URLs for external or third-party internet websites referred to in this publication and does not guarantee that any content on such websites is, or will remain, accurate or appropriate.

For
Suhasini and Uma

Contents

Detailed Contents *page* ix
Preface xix

1 Energy and Galerkin Approaches 1

2 Gaussian Elimination 35

3 One-Dimensional Elasticity 71

4 One-Dimensional Heat Conduction 118

5 Trusses 152

6 Two- and Three-Dimensional Elasticity 183

7 Axisymmetric Problems in Elasticity 259

8 Two- and Three-Dimensional Heat Conduction and Other Scalar Field Problems 293

9 Elements in Bending 340

10 Structural Vibration 384

11 Miscellaneous Topics 444

12 Preprocessing and Postprocessing 468

Appendix List of Symbols and Computer Code Variables 489
Bibliography 490
Index 493

Detailed Contents

Preface *page* xix

1 Energy and Galerkin Approaches 1

1.1 Introduction 1
1.2 Outline of Presentation 1
1.3 Overview of Types of Problems and Solution Approaches 2
1.3.1 Scalar Field Problems 3
1.3.2 Structural Mechanics 3
1.3.3 Solution Approaches 5
1.3.4 Decisions Involved in Defining the Problem 5
1.3.5 Consistent Units 6
1.4 Computer Programs 6
1.5 Energy Approach 7
1.5.1 Energy in a Spring System 7
1.5.2 Energy in a Rod Undergoing Axial Deformation 8
1.5.3 Energy in a Beam Undergoing Bending 9
1.5.4 Work Potential 10
1.5.5 Principle of Minimum Potential Energy 11
1.5.6 Hamilton's Principle 11
1.5.7 Rayleigh–Ritz Method 13
1.5.8 Rayleigh–Ritz Method with Hamilton's Principle 17
1.6 Galerkin's Method 19
1.7 Linearity, Symmetry, and Positive Definiteness 26
Computer Programs 27
Problems 27

2 Gaussian Elimination 35

2.1 Introduction 35
2.2 Basic Concepts in Matrix Algebra 35
2.2.1 Simultaneous Equations 35
2.2.2 Positive Definiteness 36
2.2.3 Positive Semi-Definiteness 36
2.2.4 Diagonally Dominant Matrix 37

2.2.5 Eigenvalues and Eigenvectors 37
2.2.6 Norms 38
2.3 Gaussian Elimination 39
2.3.1 General Algorithm for Gaussian Elimination 40
2.4 LU Factorization 42
2.4.1 Forward and Backward Substitution 43
2.5 Pivoting 44
2.6 Symmetric, Banded Matrices 46
2.7 Cuthill–McKee Algorithm to Reduce Bandwidth 50
2.8 Skyline (Variable-Band) Matrices 53
2.8.1 Storage of a Symmetric Skyline Matrix 54
2.8.2 Gaussian Elimination with Column Reduction 54
2.8.3 Note on Pivoting with Ordering 58
2.9 General Sparse Symmetric Matrices 58
2.9.1 Pivoting Based on the Minimum Degree Algorithm 60
2.10 Conjugate Gradient Method for Equation Solving 62
2.10.1 Conjugate Gradient Algorithm 62
2.11 Frontal Method for FE Matrices 63
2.11.1 Connectivity and the Prefront Routine 64
2.11.2 Element Assembly and Consideration of Specified dof 64
2.11.3 Elimination of Completed dof 65
2.11.4 Backward Substitution 65
2.11.5 Consideration of Multipoint Constraints 66
2.12 Using In-Built MATLAB® Routines 66
Computer Programs 67
Problems 67

3 One-Dimensional Elasticity 71

3.1 Introduction 71
3.2 Equations of Elasticity in 1D 71
3.3 Finite Element Modeling 74
3.3.1 Element Division 74
3.3.2 Numbering Scheme 74
3.4 Local Coordinates, Shape Functions, [N] and [B] Matrices 75
3.4.1 ξ - or Intrinsic Coordinates 76
3.4.2 Shape or Interpolating Functions N_1 and N_2 77
3.4.3 Displacement Interpolation 77
3.4.4 Admissibility Conditions 79
3.4.5 The Strain–Displacement Matrix [B] 79
3.5 Element Stiffness and Load Matrices from Potential Energy 80

3.6 Assembly of the Global Stiffness Matrix and Load Vector 83
3.7 SPC-Type Boundary Conditions 85
3.7.1 Elimination Technique 85
3.7.2 Decoupling Technique 87
3.7.3 Penalty Function Technique 88
3.8 Boundary Conditions and Singularity of [K] 89
3.9 MPC-Type Boundary Conditions 98
3.9.1 Master–Slave Elimination Technique 98
3.9.2 Penalty Function Technique 100
3.10 Banded Assembly of Stiffness Matrix 101
3.11 Convergence Aspects and Adaptivity 102
3.11.1 Monotonic Convergence in Energy 102
3.11.2 Rate of Convergence 103
3.11.3 Adaptivity 105
Computer Programs 108
Problems 109

4 One-Dimensional Heat Conduction 118

4.1 Introduction 118
4.2 Governing Differential Equation 118
4.2.1 Boundary Conditions 120
4.3 Two-Node Linear Element 121
4.4 Galerkin's Approach 123
4.5 Handling SPC Boundary Conditions 125
4.5.1 BC $T_1 = T_0$ via Elimination Technique 126
4.5.2 BC $T_1 = T_0$ via Decoupling Technique 126
4.5.3 BC $T_1 = T_0$ via Penalty Function Technique 126
4.6 One-Dimensional Heat Transfer in Thin Fins 129
4.6.1 Derivation of Matrices via Galerkin's Approach 131
4.7 Convergence and Adaptivity 136
4.8 Transient Heat Conduction 137
4.8.1 Weak Form 138
4.8.2 Derivation of Matrices 138
4.9 A Discussion of Integration Techniques 143
4.9.1 Mesh Size 144
4.9.2 Explicit Methods 144
4.9.3 Implicit Methods 145
4.9.4 Mode Superposition 146
Computer Programs 147
Problems 148

5 Trusses 152

5.1 Introduction 152
5.2 Two-Dimensional Trusses 152
5.2.1 Local and Global Coordinate Systems 152
5.2.2 Formulas for Calculating ℓ and m 154
5.2.3 Element Stiffness Matrix 155
5.2.4 Stress Calculation 156
5.2.5 Temperature Load Vector 162
5.3 Three-Dimensional Trusses 164
5.4 Problem Modeling and Boundary Conditions 166
5.4.1 Incorrect BCs Causing Singularity 166
5.4.2 Symmetry 167
5.4.3 Anti-symmetry 167
5.4.4 Multipoint Constraints 168
5.5 Assembly of Global Stiffness Matrix for the Banded and Skyline Solutions 169
5.5.1 Assembly for Banded Solution 170
5.5.2 Assembly for Skyline Solution 171
Computer Programs 172
Problems 173

6 Two- and Three-Dimensional Elasticity 183

6.1 Introduction 183
6.2 Equations of Elasticity in 3D 183
6.2.1 Displacements and External Loads 183
6.2.2 Stresses and Equilibrium 184
6.2.3 Strain–Displacement Relations 187
6.2.4 Stress–Strain Relations 188
6.2.5 Compatibility Equations 189
6.2.6 Potential Energy and Work Potential 190
6.2.7 Weak Form Associated with Galerkin's Method 191
6.3 Equations of Elasticity in 2D 191
6.3.1 Plane Stress 191
6.3.2 Plane Strain 191
6.4 Numbering Scheme, Element Library, Shape Functions, and Notation Used 195
6.4.1 Three-Node Linear Triangular Element 197
6.4.2 Four-Node Quadrilateral Element 200
6.4.3 Degenerate Quad 201
6.4.4 Nine-Node Quadrilateral 201
6.4.5 Eight-Node Quadrilateral 204
6.4.6 Six-Node Triangle 205

6.4.7 Four-Node Tetrahedral 206
6.4.8 Eight-Node Hexahedral 207
6.4.9 Admissibility Conditions 208
6.5 The Strain–Displacement Matrix [B] 208
6.5.1 Two-Dimensional Elements 208
6.5.2 Three-Dimensional Elements 214
6.6 Element Stiffness Matrix and Load Vectors 214
6.7 Numerical Integration 217
6.7.1 One-Dimensional Integrals 217
6.7.2 Two- and Three-Dimensional Integrals for Quadrilateral and Hexahedral Elements 219
6.7.3 Stiffness Integration 220
6.7.4 Numerical Integration for Triangular and Tetrahedral Elements 221
6.7.5 Stress Calculations 222
6.8 Modeling and Boundary Conditions 226
6.8.1 Rectangular Plate 226
6.8.2 Octagonal Pipe (Inclined Roller) 226
6.8.3 Rigid Connection 227
6.8.4 Part with Pin Connection Subject to an Impact Load 228
6.8.5 Three-Dimensional Model of a Cylinder on Bearings 229
6.8.6 Pyramid-Shaped Part 229
6.8.7 Some General Comments on Meshing 230
6.9 Assembly for Sparse Solvers 231
6.9.1 Banded Assembly 231
6.9.2 Skyline Assembly 233
6.9.3 Sparse Assembly and Solution via MATLAB® Routines 233
6.9.4 Frontal Assembly 234
6.10 Convergence Aspects and Adaptivity 237
6.10.1 Monotonic Convergence in Energy 237
6.10.2 Adaptivity 241
6.10.3 Stress Singularities 241
Computer Programs 242
Problems 242

7 Axisymmetric Problems in Elasticity 259

7.1 Introduction 259
7.2 Equations of Elasticity in Axisymmetric Analysis 259
7.2.1 Displacements and External Loads 259
7.2.2 Stresses and Equilibrium 260
7.2.3 Strain–Displacement Relations 261

7.2.4 Stress–Strain Relations 262
7.2.5 Potential Energy and Work Potential 263
7.3 Derivation of Strain–Displacement Matrix $[B_a]$ 263
7.4 Element Stiffness Matrix and Load Vectors 266
7.4.1 Formulas for Constant Body Force and Constant Traction on a Three-Node Triangular Element 267
7.5 Problem Modeling and Boundary Conditions 271
7.5.1 Arresting Rigid-Body Motion 271
7.5.2 Cylinder Subjected to Internal Pressure 272
7.5.3 Infinite Cylinder 272
7.5.4 Press-Fit on a Rigid Shaft 273
7.5.5 Press-Fit on an Elastic Shaft 274
7.5.6 Belleville Spring 274
7.5.7 Thermal Stress Problem 275
7.5.8 Notation Used in Commercial Programs 275
Computer Programs 283
Problems 284

8 Two- and Three-Dimensional Heat Conduction and Other Scalar Field Problems 293

8.1 Introduction 293
8.2 Steady-State Heat Transfer 293
8.2.1 Differential Equation 296
8.2.2 Boundary Conditions 296
8.2.3 Finite Element Interpolation for 2D Elements 297
8.2.4 Three-Node Triangular Element 297
8.2.5 Four-Node Quadrilateral Element 298
8.2.6 The [B] Matrix 298
8.2.7 Element Matrices Derived from Galerkin's Approach 300
8.2.8 Specific Expressions for the Three-Node Triangular Element 303
8.2.9 Preprocessing for Program *Heat2D* 308
8.2.10 Two-Dimensional Fins 308
8.3 Transient Heat Conduction, Including Axisymmetric Problems 310
8.4 Torsion, Potential Flow, Seepage, Electric and Magnetic Fields, Fluid Flow in Ducts, and Acoustics 314
8.4.1 Torsion Problem 314
8.4.2 Potential Flow 317
8.4.3 Seepage 318
8.4.4 Fluid Flow in Ducts 319
8.4.5 Electrical and Magnetic Field Problems 321
8.4.6 Acoustics 325
Computer Programs 329
Problems 329

9 Elements in Bending 340

9.1 Introduction 340
9.2 Beams 340
9.2.1 Potential Energy 342
9.2.2 Finite Element Formulation 343
9.2.3 Hermite Shape Functions 343
9.2.4 Element Stiffness Matrix 346
9.2.5 Load Vector 346
9.2.6 Shear Force and Bending Moment 349
9.3 Beams on Elastic Supports 354
9.4 Plane Frames 355
9.5 Three-Dimensional Frames 361
9.6 Modeling Aspects 365
9.6.1 Symmetry 365
9.6.2 Pin Joint 366
9.7 Thin Plates in Bending 366
9.7.1 Potential Energy 368
9.7.2 Nine-dof Triangular Element 368
9.7.3 Absence of a C^1 Continuous Displacement Field for a Nine-dof Element 369
9.7.4 The DKT Element 370
9.7.5 Converting Distributed Loads to Equivalent Point Loads in the DKT Element 371
9.8 Folded Plates 374
9.9 Thermal Stresses 375
Computer Programs 376
Problems 376

10 Structural Vibration 384

10.1 Introduction 384
10.2 Formulation 384
10.2.1 Hamilton's Principle 384
10.2.2 Solid Body with Distributed Mass 386
10.2.3 Natural Frequencies and Mode Shapes: the Eigenvalue Problem 387
10.3 Consistent Element Mass Matrices 389
10.3.1 One-Dimensional or Bar Element 389
10.3.2 Truss Element 389
10.3.3 Three-Node Triangular or CST Element 391
10.3.4 Isoparametric Elements in 2D and 3D Elasticity 392
10.3.5 Tetrahedral Element 393
10.3.6 Hexahedral Element 393
10.3.7 Axisymmetric Triangular Element 394

10.3.8 Beam Element 395
10.3.9 Frame Element 395
10.3.10 DKT Plate Bending Element 396
10.4 Lumped Element Mass Matrices 397
10.4.1 Technique 1 397
10.4.2 Technique 2 399
10.5 Forced Response Problems 408
10.5.1 Mode Superposition 408
10.5.2 Direct Integration Techniques 410
10.6 Guyan Reduction 413
10.7 Methods for Solving the Eigenvalue Problem 415
10.7.1 Properties of Eigenvectors 416
10.7.2 Characteristic Polynomial Method 416
10.7.3 Vector Iteration Methods 417
10.7.4 Shifting 419
10.7.5 Orthogonal Space 419
10.7.6 Transformation Methods 420
10.7.7 Generalized Jacobi Method 420
10.7.8 Tridiagonalization and the Implicit Shift Approach 425
10.7.9 Bringing the Generalized Problem to the Standard Form 425
10.7.10 Tridiagonalization 426
10.7.11 Implicit Symmetric QR Step with Wilkinson Shift for Diagonalization 429
10.8 Buckling Analysis 430
Computer Programs 434
Problems 434

11 Miscellaneous Topics 444

11.1 Introduction 444
11.2 Linear Orthotropic Materials 444
11.2.1 Temperature Effects 447
11.3 Nonlinear Heat Conduction Problems in 1D 450
11.3.1 Temperature-Dependent Thermal Conductivity 450
11.3.2 Load Increment Loop 452
11.3.3 Nonlinear Elastic Material Under Small Strain 458
11.3.4 Physical Interpretation of the Newton–Raphson Method 459
11.4 Additional Nonlinear Problems 460
11.4.1 Elastoplastic Problem in 1D 461
11.4.2 Buckling Load Determination via Nonlinear Analysis 462
11.4.3 General Comments 464
Problems 465

12 Preprocessing and Postprocessing 468

12.1 Introduction 468
12.2 Mesh Generation for 2D Plane Problems 468
12.2.1 Region and Block Representation 468
12.2.2 Block Corner Nodes, Sides, and Subdivisions 469
12.2.3 Generation of Node Numbers 470
12.2.4 Generation of Coordinates and Connectivity 472
12.2.5 Examples of Mesh Generation 473
12.2.6 Mesh Plotting 474
12.2.7 Data Handling and Editing 474
12.3 Filling a 3D Region with Tetrahedral Elements 475
12.4 Postprocessing 479
12.4.1 Deformed Configuration and Mode Shape 479
12.4.2 Contour Plotting 479
12.4.3 Nodal Values from Known Constant Element Values for a Triangle 481
12.4.4 Least-Squares Fit for a Four-Node Quadrilateral 482
12.5 Conclusion 484
Computer Programs 486
Problems 486

Appendix List of Symbols and Computer Code Variables 489
Bibliography 490
Index 493

Preface

Overview

Finite elements ("FE" or "FEA") is a numerical tool used for analyzing problems involving stress analysis, heat and fluid flow, resonance frequencies, mode shapes, and more. Irregularly shaped domains and various materials can be incorporated. This book deals with a variety of topics in a manner that integrates theory, algorithms, modeling, and computer implementation. Many solved examples reinforce this pedagogy, along with end-of-chapter problems, in-house source codes for multiple platforms, and a solutions manual for the instructor. Topics include energy and Galerkin approaches, equation solving with sparsity, elasticity, heat conduction and other scalar field problems, vibration, and pre- and postprocessing. The variety of topics dealt with enables the book to be used as a text in various engineering disciplines at the senior undergraduate or first-year graduate level. The book can also serve as a learning resource for practicing engineers.

Computer implementation, which parallels the theory, has helped to explain the material in the text with greater insight and accuracy. The programs can be tried out by students, researchers, and practicing engineers. In this fifth edition, the pedagogy is improved by: (1) increasing the number of solved examples from 49 in the earlier edition to 85 in the current one; (2) the variety and details in each solved example, including writing of specific code (contained in the website noted below); (3) new topics, including Galerkin and energy approaches, singularity of stiffness, convergence, adaptivity, handling time-dependent problems, sparsity in Gaussian elimination and in finite element assembly, using MATLAB® routines, and plate bending; and (4) adding in-house Python and MATLAB® programs.

Highlights Pertaining to Computer Programs Provided

- In-house programs have been developed in MATLAB®, Python, Fortran, C, JavaScript, and Excel VBA. These use input–output files with banded, skyline, and frontal solvers. The computer programs are provided on the website: www.cambridge.org/chandrupatla-belegundu5e and are organized in subdirectories as: \Matlab, \Python, \Fortran, \C, \JavaScript, \ExcelVBA, \EXAMPLES, \EXTRAS.
- The \EXAMPLES subdirectory contains input (.inp) files that interface to the computer programs. \ExcelVBA and \Javascript programs have integrated data.

- The \EXTRAS contain MATLAB® files used in the solved examples. These provide understanding, and also can be readily rewritten in other languages as they follow the theory in a transparent manner, and use in-built routines sparingly.
- A Readme.txt file is provided in the main directory. At the end of each chapter the names of programs pertinent to that chapter are listed.
- A solutions manual is provided to instructors.
- Appendix 1 contains a list of symbols and computer code variables.

Highlights Pertaining to Book Chapters

Chapter 1: Energy and Galerkin Approaches

This first chapter focuses on two main approaches: energy and Galerkin. Energy is used on elasticity problems, while Galerkin is used in heat conduction and other scalar field problems. Ritz basis functions and admissibility aspects are discussed. More detailed explanations of essential and natural boundary conditions and applications to time-dependent problems are presented. A section is given on properties of a differential operator that ties in with the solved examples. 2D/3D elasticity equations are deferred to Chapter 6. End-of-chapter problems focus on the two keystone approaches.

Chapter 2: Gaussian Elimination

Gaussian elimination is discussed with LU decomposition in general, banded, skyline solvers, along with algorithms and computer programs. Pivoting has also been added. The Cuthill–McKee algorithm for reducing the bandwidth and profile of a matrix is presented (code given in the MATLAB® subdirectory). Use of in-built MATLAB® routines covering various aspects including LU decomposition, bandwidth, and profile reduction and sparse solution are explained.

Chapter 3: One-Dimensional Elasticity

The advantage of piecewise linear basis functions over global polynomials used in Rayleigh–Ritz methods is emphasized. Handling SPC-type (single point) boundary conditions by elimination, penalty, and decoupling techniques is presented. Handling MPC-type (multi-point) boundary conditions by master–slave and penalty function techniques is presented. A section on singularity of stiffness is added which is of practical importance to the user. In a new section, mesh convergence and adaptivity with *h*-elements are rigorously presented.

Chapter 4: One-Dimensional Heat Conduction

This is a new chapter. Earlier, it was part of a chapter on 1D and 2D heat conduction plus other scalar field problems. Based on reviewer feedback, an early chapter on 1D heat conduction has made the first four chapters of the text a self-contained foundation for the

linear finite element method. Galerkin's method is used and explained in detail. Time-dependent problems are formulated, and solutions via implicit, explicit, and mode superposition techniques are presented.

Chapter 5: Trusses

Improper modeling of boundary conditions causing singularity of stiffness is explained along with modeling symmetry and anti-symmetry. Multipoint constraint modeling and solution using a technique given in Chapter 3 is presented.

Chapter 6: Two- and Three-Dimensional Elasticity

In earlier editions, three-node triangular elements, four-node and higher-order elements, and 3D tetrahedral and hexahedral elements were covered in separate chapters. Owing to the considerable overlap, and since the element matrices can be derived using the same general expressions, namely $\mathbf{B} = \mathbf{AG}$, these have been unified in this chapter. Numerical integration fits naturally in this unified treatment. The chapter begins with the equations of elasticity in 3D and 2D with the Rayleigh–Ritz technique applied to a problem, which is later solved using the FE method. Modeling considerations and integration of the codes (i.e., assembly process) with both in-house and MATLAB® sparse solvers are discussed. Convergence aspects and adaptivity are presented rigorously, building on the material given in Chapter 3. Singularities specific to 2D/3D problems are outlined.

Chapter 7: Axisymmetric Problems in Elasticity

Earlier, the material was closely interconnected with use of three-node triangular elements. Here, the development is general in that any type of element (three- or four-node) can be used. Numerical integration fits more naturally and clearly in the revised treatment. Via a solved example, detailed treatment of a press-fit involving MPCs is given with convergence of results using mesh refinement.

Chapter 8: Two- and Three-Dimensional Heat Conduction and Other Scalar Field Problems

Changes here are reflected by the details involving solved examples, as for example involving a contour integral to evaluating the impedance of a coaxial element, and a time-dependent heat conduction problem in cylindrical coordinates.

Chapter 9: Elements in Bending

With regard to beams, additions pertain to plotting of beam deflections using Hermite shape functions and plotting of the bending moment diagram, as part of the postprocessing step.

In addition to beams and 2D/3D frames, bending of thin plates is presented. Details pertaining to the DKT (discrete Kirchoff triangle) element are given. Proper handling of distributed loads using the element is discussed, with solved examples. This element is used for solving a thermal stress problem, and later used for vibration analysis in Chapter 10.

Chapter 10: Structural Vibration

Lumped mass matrices are discussed in more detail and solved examples compare results using consistent and lumped masses. Mode superposition is introduced for handling forced vibration problems. Other topics relating to Guyan reduction and methods for solving the eigenvalue problem are retained. A new section on eigen buckling analysis with truss elements is added.

Chapter 11: Miscellaneous Topics

This is a new chapter. Orthotropic materials are discussed – this was part of the earlier edition. Introduction to nonlinear FEA analysis is new. Basic concepts of the Newton–Raphson method and tangent stiffness applied to 1D heat conduction and to 1D nonlinear elastic material under small strain are presented. Explicit integration is shown in a nonlinear transient heat conduction problem via a solved example. A nonlinear analysis of a simple truss structure is given to estimate the buckling load, which is then compared to that obtained from solving the eigenvalue problem.

Chapter 12: Preprocessing and Postprocessing

This chapter deals with 2D mesh generation and contour plotting and is the same as in the earlier edition.

How to Use this Book

This book can be navigated by the instructor or reader based according to the following:

- Chapters 1–4 form the foundation of the linear FE method covering elasticity and heat conduction (scalar field).
- Chapter 11 covers orthotropic materials and offers an introduction to nonlinear problems.
- Chapters 5, 6, 7, and 9 focus on structural problems.
- Chapter 8 focuses on 2D and 3D scalar fields.
- Chapter 10 focuses on vibration.
- Chapter 12 may be covered together with Chapter 6.

We are grateful to the students at our respective institutions for motivating us to further develop this book. Professor Chandrupatla would like to thank Dr. Ratneshwar Jha,

department head, for encouragement received. He also wishes to express his gratitude to Professor J. Tinsley Oden of the University of Texas, who provided the inspiration needed. Professor Belegundu would also like to thank Dr. Karen Thole, department head, for her strong encouragement in this effort, and Professor Subramaniam D. Rajan at Arizona State University for many discussions. We are thankful to the many reviewers of this book for their excellent feedback.

1 Energy and Galerkin Approaches

1.1 Introduction

The finite element (FE) method has become a powerful tool for the numerical solution of a wide range of engineering problems. Applications range from deformation and stress analysis of automotive, aircraft, building, and bridge structures to field analysis of heat flux, fluid flow, magnetic flux, seepage, and other flow problems. With advances in computer technology and CAD systems, complex problems can be modeled with relative ease. Several alternative configurations can be tested on a computer before the first prototype is built. All of this suggests that we need to keep pace with these developments by understanding the basic theory, modeling techniques, and computational aspects of the FE method. In this method of analysis, a complex region defining a continuum is discretized into simple geometric shapes called finite elements. The material properties and the governing relationships are considered over these elements and expressed in terms of unknown values at element corners. An assembly process, duly considering the loading and constraints, results in a set of equations. Solution of these equations gives us the approximate behavior of the continuum.

Basic ideas of the FE method originated from advances in aircraft structural analysis. In 1941, Hrenikoff presented a solution to elasticity problems using the "framework method." A paper by Courant, which used piecewise polynomial interpolation over triangular subregions to model torsion problems, appeared in 1943. Turner et al. derived stiffness matrices for truss, beam, and other elements, and presented their findings in 1956. The term *finite element* was first coined and used by Clough in 1960. In the early 1960s, engineers used the method for approximate solution of problems in stress analysis, fluid flow, heat transfer, and other areas. Papers by Argyris in 1955 on energy theorems and matrix methods laid a foundation for further developments in FE studies. The first book on finite element analysis (FEA) by Zienkiewicz and Cheung was published in 1967. In the late 1960s and early 1970s, FEA was applied to nonlinear problems and large deformations. Oden's book on nonlinear continua appeared in 1972. The mathematical foundations were laid in the 1970s. New element development, convergence studies, and other related areas fall in this category. Today, the developments in mainframe computers and the availability of powerful microcomputers have brought this method within reach of students and engineers working in small industries.

1.2 Outline of Presentation

In this book, we adopt both energy and Galerkin approaches. The energy approach may be categorized as a variational approach, and Galerkin's belongs to the category of weighted residual approaches. This chapter presents the basic concepts behind these two approaches along with several solved examples and end-of-chapter exercises. In this chapter, as well as in the text broadly, the energy approach is used for mechanics problems, namely rods, beams, and elasticity (Chapters 1, 3, 5–7, 9–11), as it is well suited to this class of problems and consequently easier to grasp for students. Galerkin's approach is used for heat conduction and other scalar field problems (Chapters 1, 4, 8, 11) as an energy form is not readily available and often does not exist. Rather, a differential equation is derived based on conservation laws and is used as the starting point for deriving the needed matrices. However, once Galerkin's approach is understood, it can be readily applied to mechanics problems as well, where it reduces to the principle of virtual work.

The focus in the current chapter is to give the student a good foundation and practice in obtaining approximate solutions via both energy and Galerkin approaches, together with related concepts such as admissible Ritz functions, strong and weak forms, and properties of a differential operator. Approximating the displacement or temperature field is a common step in both energy and Galerkin approaches. Simple polynomial or trigonometric approximations are used in this chapter to illustrate the approaches, while FE 'piecewise' approximations are used in subsequent chapters. Thus, this chapter contains the underlying concepts and the student is urged to re-read this chapter along with its solved examples at a later stage. Piecewise approximations allow mesh refinements to be readily made to capture sharp gradients, handle irregular geometry and boundary conditions (BCs), and tackle 3D problems. Further, the locality of approximation using piecewise functions leads to sparse system of equations that can be efficiently solved even at large scale. Solving sparse equations is discussed in Chapters 2 and 6.

Chapter 9 deals with bending elements, namely beams, frames, and plates, and Chapter 10 deals with structural vibration. Chapter 11 covers miscellaneous topics including orthotropic materials and nonlinear behavior. Chapter 12 is on pre- and postprocessing. Time-dependent problems are covered in Chapters 1, 4, 8, and 10.

1.3 Overview of Types of Problems and Solution Approaches

This text deals with theory, modeling, and computer implementation of the FE method to solve a variety of engineering problems related to stress analysis and scalar field problems, the latter governed by the Helmholtz equation, which includes heat conduction. Except for an introductory chapter on nonlinear analysis (Chapter 11), the focus is on linear problems. Orthotropic materials are also discussed in Chapter 11.

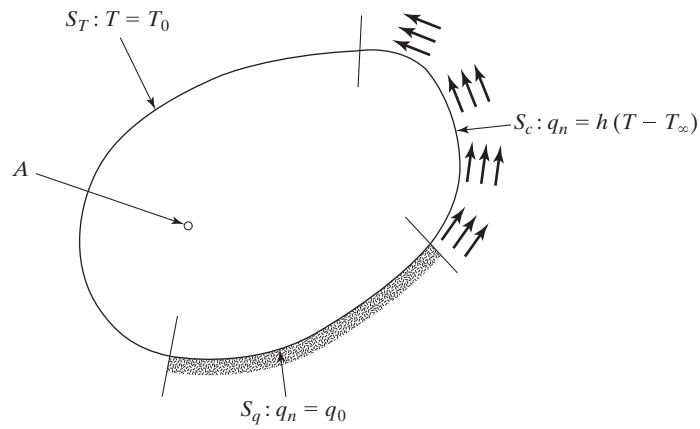

Figure 1.1 Boundary conditions in BVP-1.

1.3.1 Scalar Field Problems

Heat conduction and other scalar field problems discussed in Chapters 1, 4, 8, and 11 involve solution of the Helmholtz equation for the field variable $T(\mathbf{x}, t)$,

$$\frac{1}{\alpha}\frac{\partial T}{\partial t} = \nabla^2 T + \frac{1}{k}Q \tag{BVP-1}$$

where, generally, the heat source term $Q = Q(\mathbf{x}, T, t)$ and $\nabla^2 = \frac{\partial^2}{\partial x^2} + \frac{\partial^2}{\partial y^2} + \frac{\partial^2}{\partial z^2}$ is the Laplacian operator. Boundary conditions can involve T or $\partial T/\partial x$, $\partial T/\partial y$, or a mixed combination, as shown in Fig. 1.1. An initial condition representing the temperature distribution at $t = 0$ is specified. The above type of problem involving a differential equation along with BCs and an initial condition is called a boundary value problem, or BVP. Various engineering problems fall into this category, such as:

- heat flow in or out of windows, buildings and warehouses, chimneys, and containers; temperatures in electronic circuit boards due to heat generation from computer chips; cooling of solids removed from furnaces; and
- estimating impedance in coaxial cables and capacitors in general; friction factors in pipe flow; stresses due to twisting of non-circular shafts; determination of acoustic modes.

1.3.2 Structural Mechanics

Elasticity and solid mechanics problems discussed in Chapters 1, 3, 5–7, 9–11, involve solution of a set of equilibrium equations along with BCs, strain–displacement, stress–strain, and compatibility, as indicated in the equations below and in Fig. 1.2. Special cases of plane stress, plane strain, and axisymmetry are discussed in Chapters 6 and 7:

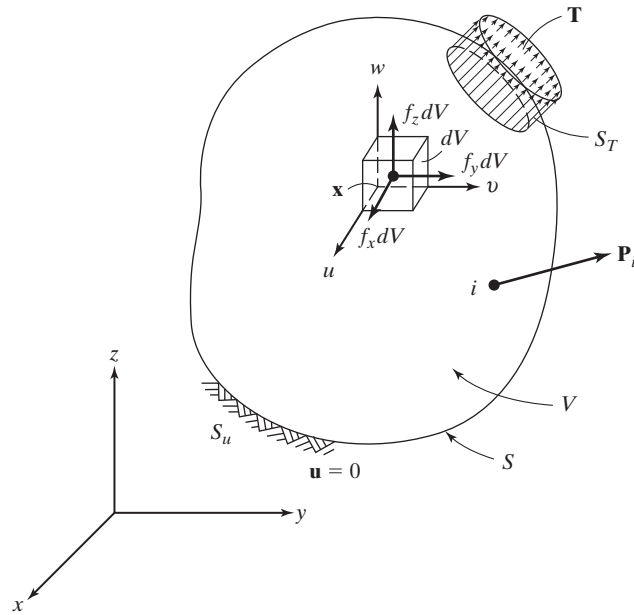

Figure 1.2 Boundary conditions in BVP-2.

$$
\begin{aligned}
&\frac{\partial \sigma_x}{\partial x} + \frac{\partial \tau_{yx}}{\partial y} + \frac{\partial \tau_{zx}}{\partial z} + f_x = \rho \frac{\partial^2 u}{\partial t^2} \\
&\cdots\cdots\cdots \\
&\sigma_x n_x + \tau_{yx} n_y + \tau_{zx} n_z = T_x \\
&\cdots\cdots\cdots \\
&\mathbf{u} = \mathbf{u}_0 \text{ on } S_u \\
&\left[\varepsilon_x, \varepsilon_y, \varepsilon_z, \gamma_{yz}, \gamma_{xz}, \gamma_{xy}\right] = \left[\frac{\partial u}{\partial x}, \frac{\partial v}{\partial y}, \frac{\partial w}{\partial z}, \frac{\partial v}{\partial z} + \frac{\partial w}{\partial y}, \frac{\partial u}{\partial z} + \frac{\partial w}{\partial x}, \frac{\partial u}{\partial y} + \frac{\partial v}{\partial x}\right] \\
&\boldsymbol{\sigma} = \mathbf{D}(\boldsymbol{\varepsilon} - \boldsymbol{\varepsilon}_0) \\
&\frac{\partial^2 \varepsilon_{xx}}{\partial y \partial z} = \frac{\partial}{\partial x}\left(-\frac{\partial \varepsilon_{yz}}{\partial x} + \frac{\partial \varepsilon_{zx}}{\partial y} + \frac{\partial \varepsilon_{xy}}{\partial z}\right) \\
&\cdots\cdots\cdots
\end{aligned}
\tag{BVP-2}
$$

Boundary conditions in beams and plates involve stress resultants which involve integrals of the stresses over the cross-section.

Various engineering problems fall into this category, such as:

- stresses and deformations due to loads and temperatures in machine components, flywheels, forging rods, and die blocks; aircraft wing and fuselage structures; bridges; and
- resonance frequencies and vibration response.

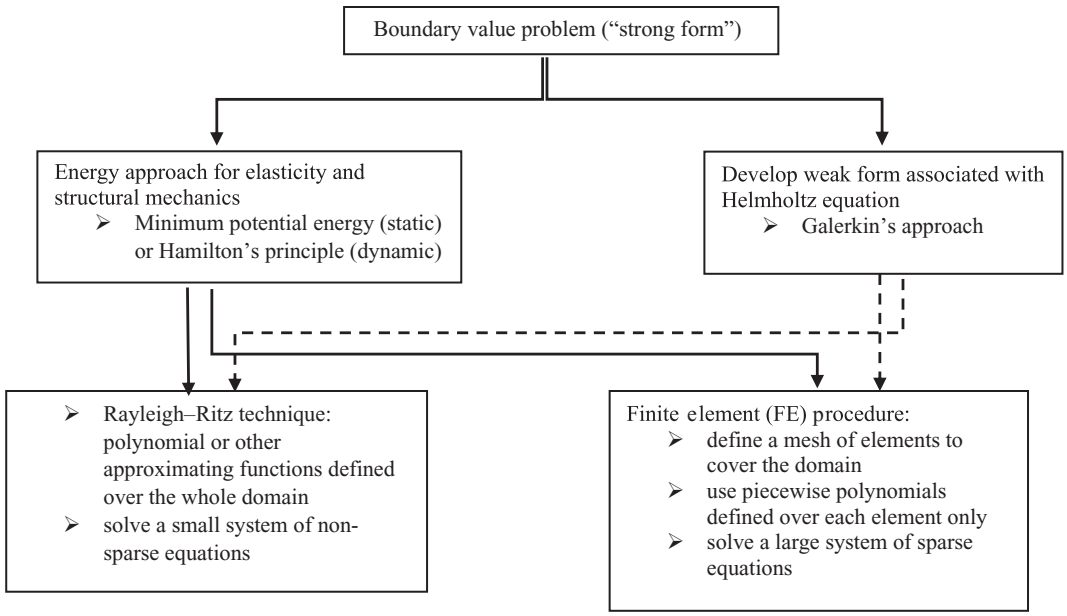

Figure 1.3 Solution approaches.

1.3.3 Solution Approaches

Analytical expressions for the solution of the above BVPs are only available for certain types of geometries and loading. Here, we focus on obtaining an approximate numerical solution. Figure 1.3 shows the solution approaches as discussed in the text.

> In this chapter, the focus is on energy and Galerkin's approaches with Ritz approximations (as opposed to piecewise approximating functions used in the FE procedure). Once this is understood, switching from Ritz functions to FE piecewise functions is easier to grasp. The reader will benefit by re-reading this chapter at a later stage.

1.3.4 Decisions Involved in Defining the Problem

The BVP statement, which comprises the differential equation with boundary and initial conditions, should capture the essential physics of the problem or process that is being modeled.

It should also be well posed. A well-posed problem is one for which: (1) a solution exists, (2) the solution is unique, and (3) the solution is stable in that a small change in the data leads to only a small change in the solution. Various decisions are involved, such as whether to include nonlinearity or dynamic effects and how best to model the BCs. Subsequently, the

level of discretization (number of terms in the polynomial or size of elements in the FE mesh) must be chosen. Thus, both modeling and meshing errors must be kept small enough so as to yield physically reasonable results. Some of these aspects, namely singularity of the stiffness matrix, *h*-convergence, adaptivity, and stress singularities are discussed in Chapters 3 and 6. For instance, consider a simply supported square plate in bending subject to a concentrated load at its center. If only peak displacement is of importance, then a thin plate model is easy to model and obtain the results; if stresses are important, then the concentrated load must be represented as a distributed load over a small area; further, a full 3D model with/without material nonlinearity may be needed.

1.3.5 Consistent Units

Finite element codes assume units are consistent. For example, if nodal coordinates are in 'm' and forces are in 'N', then Young's modulus E must be in N/m^2 or Pa. If coordinates are in 'mm' and loads are in 'N', then E must be in N/mm^2 or MPa. In N-m units, density ρ must be in kg/m^3, since then force in N equals $\rho \times$ volume $\times$ acceleration. As an example, consistent units for steel are indicated in Table 1.1.

1.4 Computer Programs

Computer use is an essential part of the FE analysis. Well-developed, well-maintained, and well-supported computer programs are necessary in solving engineering problems and interpreting results. Many available commercial FE packages fulfill these needs. Commercial packages provide user-friendly data-input platforms and elegant and easy-to-follow display formats. However, the packages do not provide an insight into the formulations and solution methods. Specially developed computer programs with available source codes enhance the learning process. We follow this philosophy in the development of this book. Every chapter is provided with computer programs that parallel the theory. These codes are available on the publisher's website, given in the preface. Also, problem-specific MATLAB® codes are listed and provided in some of the solved examples. The student will benefit by seeing how the steps given in the theoretical development are implemented in the

Table 1.1 Illustration of consistent units for steel

Units	E	ρ
N-m-s	200e9 = 200 × 10^9	7850
N-mm-s	200e3 = 200 × 10^3	7850e-12
N-mm-ms	200e3 = 200 × 10^3	7850e-6
lb-in-s	30e6	0.283/386 = 7.33e-4

programs. Further, the solved examples can serve as a testbed of problems for the student to solve and thereby gain proficiency using commercial software.

A list of all programs is given at the end of each chapter.

- Source codes are provided in \Matlab\, \Fortran\, \Python\, \JavaScript\, \Excel VBA\, and \C\ directories for various FE programs specific to each chapter. Input files used by these programs are in the \EXAMPLES\ directory. Solved examples and additional MATLAB® programs are in \EXTRAS\.
- Refer to the *Readme* file given in the repository.
- The main program variables used and structure of input data files is given in Appendix 1.

1.5 Energy Approach

In this approach, a functional such as total potential energy is needed whose extremum provides the solution. It is also called the variational approach. In static problems in mechanics, the total potential energy is an integral written in terms of the displacement field, which is to be determined in an approximate manner. In dynamics, the integral of a Lagrangian serves as the functional. The unknown field variable can be, for instance, displacement, temperature, pressure, potential, or a wave function. It is approximated by polynomial or other interpolating functions. This 'discretization' reduces the functional to a function of a finite number of unknown parameters, which are then determined by setting the differentials to zero. The process is called the Rayleigh–Ritz or Ritz method.

As noted above, the energy approach is well suited to problems in mechanics. Using simple classes of 1D problems, strain energy, kinetic energy, work potential, principle of minimum potential energy, Hamilton's principle, and the Rayleigh–Ritz method are explained here. Linear elastic behavior and small deformation are assumed in the expressions below, and external forces are assumed to be conservative (unlike friction, which is nonconservative). In an energy approach, one can consider the effect of adding energies from special effects (e.g., shear, rotational inertia, Coriolis). Convenient coordinate systems may be used. It is convenient to discard selected terms such as those involving small energies, compute the solution, and then compare with the experiment. Energy in 2D and 3D systems is presented in Chapter 5.

1.5.1 Energy in a Spring System

Strain energy is the internal energy stored in a body due to deformation. Strain energy in a spring is simply $U_{\text{spring}} = \frac{1}{2}\, k\ \delta^2$, where $\delta =$ extension or compression in the spring and k is the spring constant. The spring constant can be experimentally measured as the load divided by

the displacement, or can be determined using strength of materials formulae. For a uniform rod in constant tension or compression, $k = \frac{EA}{L}$, where E = Young's modulus, A = cross-sectional area, and L = length. For a uniform rod in torsion (round cross-section), $k_t = \frac{GJ}{L}$, where G = shear modulus and J = polar moment of inertia. If the left and right ends of a spring have displacements u_1 and u_2, respectively, then $\delta = u_2 - u_1$ and $U_{\text{spring}} = \frac{1}{2}\, k\, (u_2 - u_1)^2$. Force in the spring equals $k\delta$. In a torsional spring, we have $U_{\text{spring}} = \frac{1}{2}\, k_t\, (\theta_2 - \theta_1)^2$. In a spring system with n nodes, $U_{\text{spring system}} = \sum_{i=1}^{n} \frac{1}{2}\, k_i\, \delta_i^2$. Example 1.1 illustrates this in detail. If the mass of the spring is not negligible, then its kinetic energy can be estimated based on expressions for a rod in axial deformation, given in the next subsection.

1.5.2 Energy in a Rod Undergoing Axial Deformation

Consider the 1D problem of a rod subject to axial forces, as shown in Fig. 1.4. The axial displacement u is a function of position, and is referred to as the displacement *field*. This fact makes the problem a *continuum*. Referring to Fig. 1.4, we have the relations (see, e.g., Dym and Shames 1973)

$$\sigma_x = E\, \varepsilon_x \qquad \text{Hooke's law,} \tag{1.1a}$$

$$\varepsilon_x = \frac{du}{dx} \qquad \text{strain–displacement relation,} \tag{1.1b}$$

$$\frac{d\sigma_x}{dx} + f_x = 0 \;\Rightarrow\; \frac{d}{dx}\left(E\,\frac{du}{dx}\right) + f_x = 0 \qquad \text{equilibrium, } A = \text{constant,} \tag{1.1c}$$

$$dV = A\,dx \tag{1.1d}$$

$$U = \frac{1}{2}\int_V \sigma_x\, \varepsilon_x\, dV \qquad \text{total strain energy,} \tag{1.2}$$

where, $u(x)$ = axial displacement, σ_x = stress in the x-direction or simply axial stress, and ε_x = axial strain, A = cross-sectional area, V = volume, L = length, E = Young's modulus of elasticity, f_x = body force = force per unit volume (e.g. N/m^3), and U = total strain energy

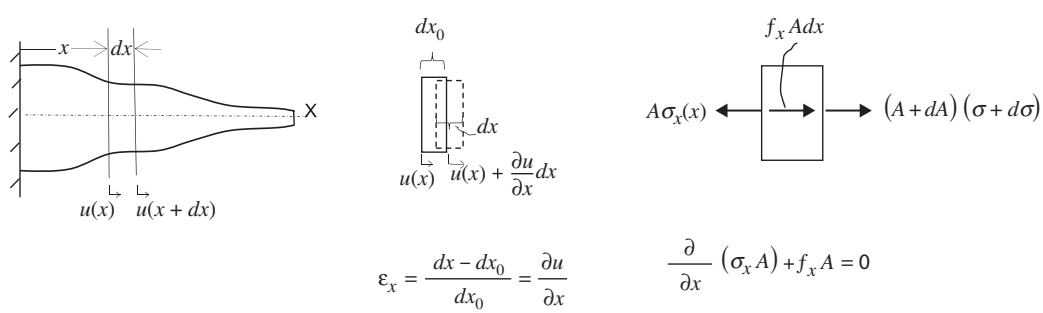

Figure 1.4 Axial deformation of a rod (1D elasticity).

in the body (e.g., N·m). Examples of body forces are gravity, inertial force due to acceleration, and electromagnetic forces. Solved examples in this text will use these relations. In general, all of these are functions of x, which is the position of a point along the rod. From the above,

$$U = \frac{1}{2}\int_0^L E\,A\left(\frac{du}{dx}\right)^2 dx \tag{1.3}$$

In a dynamic situation, $u \equiv u(x,t)$. Denoting $\dot{u} \equiv \frac{\partial u}{\partial t}$, $\rho =$ density, kinetic energy is

$$KE = \frac{1}{2}\int_0^L \rho\,A\,\dot{u}^2\,dx \tag{1.4}$$

1.5.3 Energy in a Beam Undergoing Bending

By jumping on a diving board, the board (a cantilever beam) stores strain energy, which is then released and projects the diver up and forward for a dive into the swimming pool. From elementary beam theory, for beams with cross-sections that are symmetric with respect to the plane of loading (Fig. 1.5),

$$\sigma_x = -\frac{M}{I}y, \quad \varepsilon_x = \frac{\sigma_x}{E}, \quad \frac{d^2v}{dx^2} = \frac{M}{EI} \tag{1.5}$$

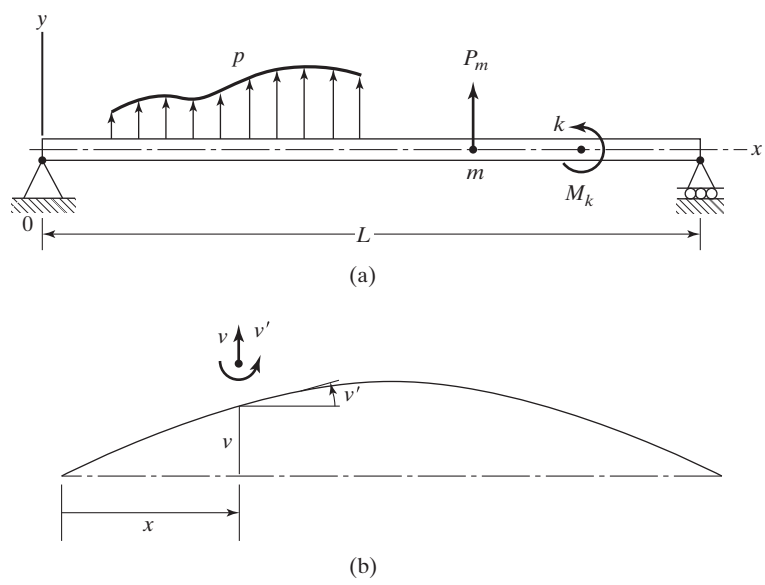

Figure 1.5 (a) Beam loading, (b) deformation of the beam centerline.

where σ_x is the stress in the x-direction, which is normal to the cross-section, ε is the normal strain, M is the bending moment at the section, v is the deflection of the centroidal axis at x, v' is the slope at x, and I is the moment of inertia of the section about the neutral axis (the z-axis passing through the centroid). The strain energy in an element of length dx is

$$\begin{aligned} dU &= \frac{1}{2}\int_A \sigma_x\, \varepsilon_x\, dA\, dx \\ &= \frac{1}{2}\left(\frac{M^2}{EI^2}\int_A y^2\, dA\right) dx \end{aligned}$$

Noting that $\int_A y^2\, dA$ is the moment of inertia I, and integrating over the volume to get total energy,

$$U = \frac{1}{2}\int_0^L EI\left(\frac{d^2 v}{dx^2}\right)^2 dx \tag{1.6}$$

In dynamic response, $v \equiv v(x,t)$, $\dot{v} \equiv \frac{\partial v}{\partial t}$, and kinetic energy is

$$KE = \frac{1}{2}\int_0^L \rho\, A\, \dot{v}^2\, d\,x \tag{1.7}$$

Equation (1.7) consists of energy only due to translation of the beam cross-section. Effects of bending and shear can be added to this.

1.5.4 Work Potential

A scalar function W_P associated with *externally applied loads* is defined as

$$W_P = -\int_V f_x(x)\, u(x)\, dV - \int_S T_x(x)\, u(x)\;\, dS - \sum_i F_i\, u_i \tag{1.8a}$$

In a beam (Fig. 1.5),

$$W_P = -\int_L p(x)\, v(x)\, dx - \sum_m P_m\, v_m - \sum_k M_k\, v'_k \tag{1.8b}$$

The body force f_x, force per unit volume acts at each point in the body (gravity, inertial force due to acceleration, electromagnetic force), and thus its work potential is the integral over the volume. Traction force T_x is a surface force per unit area (fluid pressure, friction, contact force between bodies), and its work potential involves an integral over the surface of the body. F_i is a point or concentrated force (N) and its work potential equals product of force and displacement at that point in the direction of the force. The minus sign in eq. (1.8) is part of the definition of W_P.

1.5.5 Principle of Minimum Potential Energy

The total potential energy Π of an elastic body is defined as the sum of the total strain energy and the work potential as

$$\Pi = U + W_P \tag{1.9}$$

Consider conservative elastic systems, and write Π in terms of displacements (as opposed to stresses). The principle states:

Of all kinematically admissible displacement fields $\mathbf{v}$ *the equilibrium state of the elastic body is the one that minimizes the potential energy* $\Pi(\mathbf{v})$.

The principle itself applies to nonlinearly elastic systems as well, although expressions such as $\varepsilon = \frac{du}{dx}$ are used to write Π assume linearity. A kinematically admissible displacement field satisfies displacement constraints associated with the BVP and is sufficiently smooth.

For example, in a fixed–free cantilever beam, an admissible (centerline) displacement $v(x)$ must satisfy the *essential* BCs $v(0) = v'(0) = 0$ and must not have kinks; the latter requirement implies that $v(x)$ has continuous first derivative in $[0, L]$ or C^1 continuous which ensures that magnitude of v'' is bounded, which ensures that energy in eq. (1.6) is bounded.

1.5.6 Hamilton's Principle

A Lagrangian function L is defined as the difference between kinetic energy and potential energy as

$$L = KE - \Pi \tag{1.10}$$

Considering conservative systems, the principle states:

The motion of a system from time t_1 *to* t_2 *is such that the integral*

$$I = \int_{t_1}^{t_2} L\,dt \tag{1.11}$$

is an extremum for the path of motion.

The functional is often referred to as the "action" integral. Extremization involves setting the first variation of the integral equal to zero or, to use calculus-of-variations terminology, $\delta I = 0$. The principle has broad applicability and can be generalized to handle certain types of dissipation forces (Goldstein 1950).

Example 1.1

For the purposes of illustrating the principle of minimum potential energy, we consider a spring system in Fig. E1.1a. We have

$$\Pi = \tfrac{1}{2} k_2 q_2^2 + \tfrac{1}{2} k_1 (q_1 - q_2)^2 + \tfrac{1}{2} k_3 (q_3 - q_2)^2 + \tfrac{1}{2} k_4 q_3^2 - F_1 q_1 - F_3 q_3$$

Example 1.1 (cont.)

Note that the (3×1) global displacement vector $\mathbf{Q} = [q_1, q_2, q_3]^{\mathrm{T}}$ satisfies the essential BCs, as the expression above incorporates the fixed left and right supports. That is, $\mathbf{Q}$ is an *admissible* displacement. Further, $F_2 = 0$ since no external load has been applied at node 2. Minimization of Π is achieved by setting $\frac{d\Pi}{dq_i} = 0, i = 1, 2, 3$, yielding

$$\begin{aligned} k_1(q_1 - q_2) - F_1 &= 0 \\ -k_1(q_1 - q_2) + k_2 q_2 - k_3(q_3 - q_2) &= 0 \\ k_3(q_3 - q_2) + k_4 q_3 - F_3 &= 0 \end{aligned}$$

These equilibrium equations can be put in matrix form $\mathbf{K}\,\mathbf{Q} = \mathbf{F}$ as

$$\begin{bmatrix} k_1 & -k_1 & 0 \\ -k_1 & k_1 + k_2 + k_3 & -k_3 \\ 0 & -k_3 & k_3 + k_4 \end{bmatrix} \begin{bmatrix} q_1 \\ q_2 \\ q_3 \end{bmatrix} = \begin{bmatrix} F_1 \\ 0 \\ F_3 \end{bmatrix}$$

Note that $\mathbf{K}$ is symmetric, and that $K_{13} = 0$ (element in first row, third column of $\mathbf{K}$) because there is no spring connecting nodes 1 and 3.

For this simple example, physical interpretation can be given as follows. Consider the equilibrium of each of the nodes via free-body diagrams in Fig. E1.1b. We have

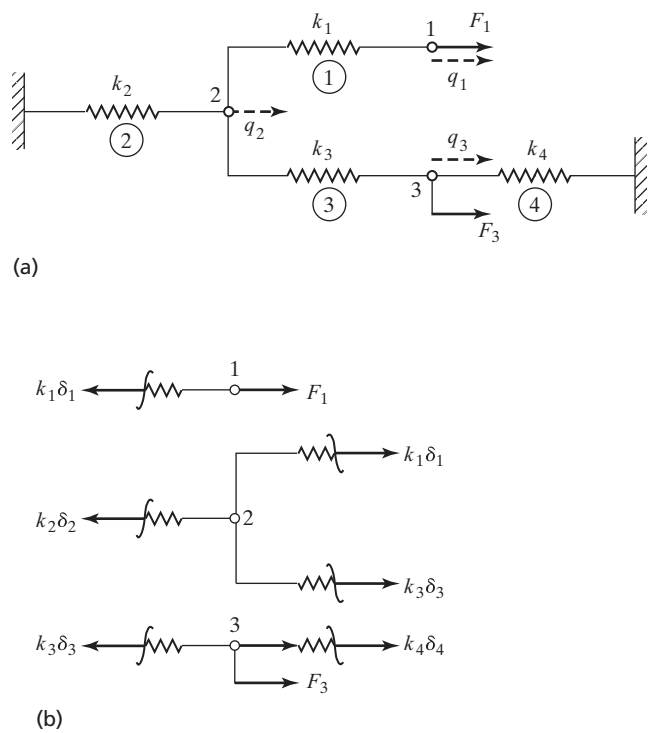

Figure E1.1 (a) Spring system, (b) free-body diagram.

Example 1.1 (cont.)

$$\begin{aligned} k_1\,\delta_1 &= F_1 \\ k_2\,\delta_2 - k_1\,\delta_1 - k_3\,\delta_3 &= 0 \\ k_3\,\delta_3 - k_4\,\delta_4 &= F_3 \end{aligned}$$

which is the same set of equations obtained via the energy approach.

1.5.7 Rayleigh–Ritz Method

In Example 1.1, the unknowns were finite in number, equal to the number of free nodes in the structure. Thus, Π was a function of a discrete number of unknowns and setting its derivatives equal to zero yielded the equilibrium solution. In a continuum, such as $u(x)$ in a rod or $v(x)$ in a beam, as discussed above, the unknown displacement is a field or function and not a finite vector. The Rayleigh–Ritz or Ritz method is a simple yet powerful technique whereby the displacement field is expressed in terms of a finite number of unknown parameters. Once this approximate field is constructed, minimization of Π is straightforward. The method is based on approximating the unknown solution with

$$u_n(x) = \sum_{i=1}^{n} a_i \;\; \varphi_i(x) \tag{1.12}$$

where u_n is called a Ritz approximation, $\{a_i\}$ are unknown constant coefficients, and $\{\varphi_i(x)\}$ are *known basis* functions. For instance:

Polynomial: $u = a_0 + a_1\,x + a_2\,x^2$ implies that the basis functions are

$$\varphi_0(x) = 1, \varphi_1(x) = x, \varphi_2(x) = x^2$$

Trigonometric: $u = a_0 + a_1\,\sin\left(\frac{\pi}{L}\,x\right) + a_2\,\sin\left(\frac{2\pi}{L}\,x\right)$ implies

$$\varphi_0(x) = 1, \varphi_1(x) = \sin\left(\frac{\pi}{L}\,x\right), \varphi_2(x) = \sin\left(\frac{2\pi}{L}\,x\right)$$

BCs are imposed on the assumed displacement field. This will reduce the total number of unknowns from n to, say, r. Thus,

$$\Pi = \Pi(a_1, a_2, \ldots, a_r) \tag{1.13}$$

and minimization gives the needed equations to solve for the unknowns from

$$\frac{d\Pi}{d\,a_i} = 0, \;\; i = 1, \;\ldots, \;\; r \tag{1.14}$$

Examples 1.2–1.4 illustrate the Rayleigh–Ritz method in one dimension. Example 6.1 illustrates the method on a 2D elasticity problem.

Example 1.2

The potential energy for the linear elastic 1D rod (Fig. E1.2), with body force neglected, is

$$\Pi = \frac{1}{2}\int_0^L EA\left(\frac{du}{dx}\right)^2 dx - 2u_1$$

where $u_1 = u(x = 1)$.

Consider a polynomial Ritz approximation

$$u = a_1 + a_2 x + a_3 x^2$$

This must satisfy $u = 0$ at $x = 0$ and $u = 0$ at $x = 2$. Thus, we obtain

$$u = a_3\, x\,(x - 2) \tag{a}$$

from which

$$u_1 = -a_3 \tag{b}$$

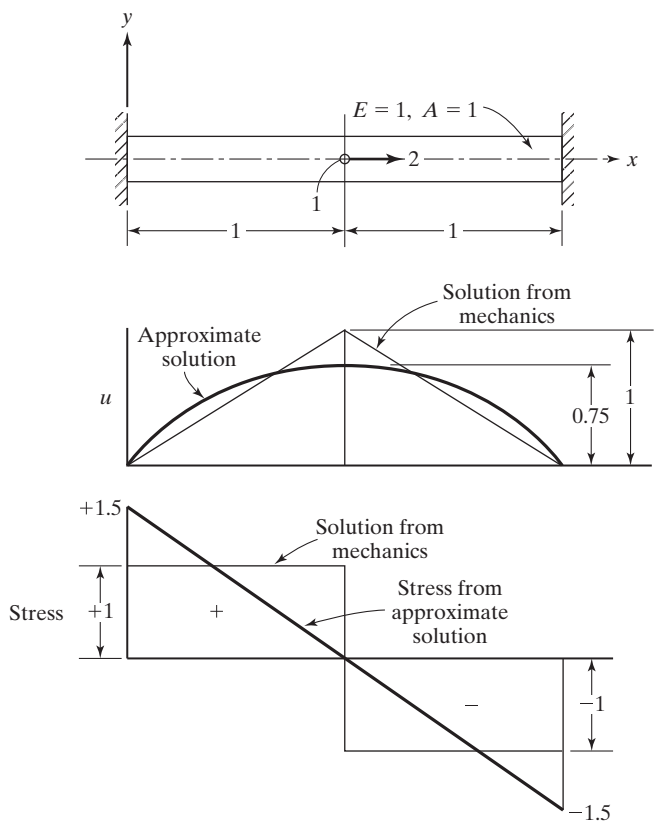

Figure E1.2

Example 1.2 (cont.)

From eq. (a), we have

$$du/dx = 2\,a_3\,(x-1) \tag{c}$$

Substituting (a)–(c) into Π gives

$$\Pi = \frac{4}{3}\,a_3{}^2 + 2\,a_3$$

Setting

$$\frac{d\Pi}{da_3} = 0$$

gives $a_3 = -0.75$. Since $\sigma = E\,du/dx$, we have

$$u = -0.75\,x\,(x-2),\ \sigma = 1.5\,(1-x)$$

These are plotted in the figure and compared to the exact solution.

Example 1.3

Consider a cantilever beam, one end fixed and the other end free, subject to a uniformly distributed load $w(x)$ per unit length. Beam properties are E, I, L, ρ for Young's modulus, moment of inertia about the neutral axis, length, and density, respectively. From strength of materials, we know the solution for tip displacement is $v(L) = \frac{wL^4}{8EI}$, and mid-span displacement is $v(L/2) = \frac{17wL^4}{384EI}$. Let us pretend that we do not know this solution. We will obtain a Rayleigh–Ritz solution assuming two different approximations:

1. $v(x) = a_0 + a_1\,(x/L) + a_2\,(x/L)^2 + a_3\,(x/L)^3$; and
2. $v(x) = a_0 + a_1\,(x/L) + a_2\,(x/L)^2 + a_3\,(x/L)^3 + a_4\,(x/L)^4$.

For either case, the energy expressions are the same as given in eqs. (1.6) and (1.8). The BCs at the fixed end are $v(0) = v'(0) = 0$, which imply $a_0 = a_1 = 0$. Further, the assumed $v(x)$ are smooth enough that v'' and hence Π is defined:

$$\Pi = \frac{1}{2}\int_0^L EI\,v''^2\,dx - \int_0^L w(x)\,v(x)\,dx$$

Thus

$$\frac{d\Pi}{da_k} = \int_0^L EI\,v''\,\frac{dv''}{da_k}dx - w\int_0^L \frac{dv}{da_k}\,dx = 0, \quad k = 2, 3, (4)$$

Example 1.3 (cont.)

Linear simultaneous equations are solved to obtain the coefficients $\{a_k\}$. Although symbolic math is not recommended except for very small problems owing to computational reasons, here it is attractive since the tedium of differentiation and integration is avoided altogether. The MATLAB® code given below readily provides the results:

Case 1

$$\frac{EI}{L^3}\begin{bmatrix} 4 & 6 \\ 6 & 12 \end{bmatrix}\begin{bmatrix} a_2 \\ a_3 \end{bmatrix} = \frac{-wL}{12}\begin{bmatrix} 4 \\ 3 \end{bmatrix} \quad \text{(generated by code below)}$$

$$v(L) = \frac{w\ L^4}{8\ EI}, \quad v_{R-R}(L/2) = \frac{w\ L^4}{24\ EI} \quad \text{(ignoring minus sign)}$$

Case 2

$$\frac{EI}{L^3}\begin{bmatrix} 4 & 6 & 8 \\ 6 & 12 & 18 \\ 8 & 18 & 144/5 \end{bmatrix}\begin{bmatrix} a_2 \\ a_3 \\ a_4 \end{bmatrix} = \frac{-wL}{12}\begin{bmatrix} 4 \\ 3 \\ 12/5 \end{bmatrix}$$

$$v(L) = \frac{w\ L^4}{8\ EI}, \quad v_{R-R}(L/2) = \frac{17\,w\,L^4}{384\ EI}$$

Not surprisingly, case 2 provides exact results, as the exact displacement is indeed a fourth-order function of x. In case 1, the displacement at the midpoint is less than exact, with 6% error; lesser displacement indicates a stiffer structure which follows from not considering energy arising from the extra fourth-order term.

MATLAB® Code Used in Example 1.3

```
function [] = Example_1_3_Rayleigh_Ritz()
clear all; close all;
syms a2 a3 a4 x w L EI
%v = a2*(x/L)^2 + a3*(x/L)^3;
v = a2*(x/L)^2 + a3*(x/L)^3 + a4*(x/L)^4;
vpp = diff(v,x,2);
Ubeam = 0.5*EI*int(vpp^2,x,0,L);
WP = w*int(v,x,0,L);
PE = Ubeam+WP;
eq1 = diff(PE,a2);
eq2 = diff(PE,a3);
eq3 = diff(PE,a4);
%[A,b] = equationsToMatrix([eq1,eq2],[a2,a3])
[A,b] = equationsToMatrix([eq1,eq2,eq3],[a2,a3,a4])
```

Example 1.3 (cont.)

```
solx = A\b;
% tip_disp = subs(v,[x a2 a3],[L solx(1) solx(2)])
% mid_disp = subs(v,[x a2 a3],[L/2 solx(1) solx(2)])
tip_disp = subs(v,[x a2 a3 a4],[L solx(1) solx(2) solx(3)])
mid_disp = subs(v,[x a2 a3 a4],[L/2 solx(1) solx(2) solx(3)])
```

1.5.8 Rayleigh–Ritz Method with Hamilton's Principle

In eq. (1.12), the a_i are functions of time t. Thus,

$$u_n(x) = \sum_{i=1}^{n} a_i(t)\,\varphi_i(x), \quad \dot{u}_n(x) = \sum_{i=1}^{n} \dot{a}_i(t)\,\varphi_i(x)$$

The Lagrangian in eq. (1.10) is discretized as

$$L = L(a_1, a_2, \ldots, a_r, \dot{a}_1, \dot{a}_2, \ldots, \dot{a}_r)$$

Setting the first variation of I in eq.(1.11) equal to zero involves an *integration by parts* and reduces to the well-known Euler–Lagrange equations,

$$\frac{d}{dt}\left(\frac{\partial L}{\partial \dot{a}_i}\right) - \frac{\partial L}{\partial a_i} = 0, \quad i = 1, \ldots, r \tag{1.15}$$

Example 1.4

Consider a fixed–free cantilever beam. Determine the fundamental resonance frequencies assuming: (a) $v(x) = a\,(x/L)^2$, and (b) $v(x) = a_1\,(x/L)^2 + a_2\,(x/L)^3$. Both of these functions satisfy the essential BCs. Use the Rayleigh–Ritz method.

Data: $E = 200\text{e}9$; $\rho = 7800$; $L = 0.6096$; $b = 0.1016$; $h = 0.0028067$; $A = bh$, $I = bh^3/12$.

Solution

a. From Example 1.3, we have the result $\Pi = \frac{1}{2}\,\frac{4EI}{L^3}\,a^2$, where load $P = 0$, as we are concerned only with free vibration. The kinetic energy of the beam is, from eq. (1.7), $KE = \frac{1}{2}\,\frac{\rho AL}{5}\,\dot{a}^2$. Writing these energies as $\Pi = \frac{1}{2}\,k_{eq}\,a^2$, $KE = \frac{1}{2}\,m_{eq}\,\dot{a}^2$, we extract the equivalent properties of a single degree of freedom system as $k_{eq} = \frac{4EI}{L^3}$ and

Example 1.4 (cont.)

$m_{eq} = \frac{\rho AL}{5} = 20\%$ (mass of beam), giving resonance frequency $f_1^{R-R} = \frac{1}{2\pi}\sqrt{\frac{k_{eq}}{m_{eq}}} = \frac{0.7118}{L^2}\sqrt{\frac{EI}{\rho A}}$ cps. Alternatively, the Euler–Lagrange equation (1.15) gives the equation of motion as

$$m_{eq}\,\ddot{a} + k_{eq}\;a = 0$$

Substituting $a = \mathrm{Y}\,\sin(\omega t + \theta)$ into the above, we get the same result. The table at the end of this example contains the result with the given data.

b. Let $\varphi_1 = (x/L)^2$ and $\varphi_2 = (x/L)^3$. Thus, $v(x) = a_1(t)\,\varphi_1(x) + a_2(t)\,\varphi_2(x)$. Equations (1.6) and (1.7) give

$$\Pi = \frac{1}{2}\int_0^L EI\left(a_1\,\varphi_1'' + a_2\,\varphi_2''\right)^2 dx = \frac{1}{2}(a_1\;a_2)\;EI\begin{bmatrix}\int \varphi_1''\,\varphi_1''\,dx & \int \varphi_1''\,\varphi_2''\,dx \\ \int \varphi_2''\,\varphi_1''\,dx & \int \varphi_2''\,\varphi_2''\,dx\end{bmatrix}\begin{pmatrix}a_1\\ a_2\end{pmatrix}$$

$$KE = \frac{1}{2}\int_0^L \rho A(\dot{a}_1\,\varphi_1 + \dot{a}_2\,\varphi_2)^2\,dx = \frac{1}{2}(\dot{a}_1\;\dot{a}_2)\;\rho A\begin{bmatrix}\int \varphi_1\,\varphi_1\,dx & \int \varphi_1\,\varphi_2\,dx \\ \int \varphi_2\,\varphi_1\,dx & \int \varphi_2\,\varphi_2\,dx\end{bmatrix}\begin{pmatrix}\dot{a}_1\\ \dot{a}_2\end{pmatrix}$$

With $\mathbf{a} = [a_1\;a_2]^{\mathrm{T}}$, we have $\Pi = \frac{1}{2}\,\mathbf{a}^{\mathrm{T}}\,\mathbf{k}_{eq}\,\mathbf{a}$, $KE = \frac{1}{2}\,\dot{\mathbf{a}}^{\mathrm{T}}\,\mathbf{m}_{eq}\,\dot{\mathbf{a}}$. The Euler–Lagrange equations are $\mathbf{m}_{eq}\,\ddot{a} + \mathbf{k}_{eq}\,\mathrm{a} = 0$. Substituting $\mathbf{a} = \mathbf{A}\;\sin\;(\omega t + \theta)$, we get the eigenvalue problem,

$$\mathbf{k}_{eq}\;\;\mathbf{Y} = \lambda\;\;\mathbf{m}_{eq}\;\;\mathbf{Y}$$

where the eigenvalue $\lambda = \omega_n{}^2$, where ω_n = resonance frequency in rad/s. Carrying out the integrations, we get

$$\frac{EI}{L^3}\begin{bmatrix}4 & 6\\ 6 & 12\end{bmatrix}\begin{bmatrix}Y_1\\ Y_2\end{bmatrix} = \lambda\;\frac{\rho AL}{210}\begin{bmatrix}42 & 35\\ 35 & 30\end{bmatrix}\begin{bmatrix}Y_1\\ Y_2\end{bmatrix}$$

The solution of this eigenvalue problem is conveniently obtained using the MATLAB® command 'eig' as:

```
K = [4 6;6 12]; M = 1/210*[42 35;35 30];
[V,D] = eig(K,M);
sqrt(D)/2/pi
```

Results for cases 1 and 2 are summarized below and compared with the exact. The one-term Ritz approximation gives a poor result, while two terms give excellent correlation for the first resonance, while second resonance is still poor. We will revisit a similar example in Chapter 10 using the FE approach. The FE method provides a systematic way of constructing the basis functions, where increasing accuracy is obtainable by simply decreasing the size of the elements.

Example 1.4 (cont.)

	$f_1 \frac{L^2}{\sqrt{EI/\rho A}}$ cps	$f_2 \frac{L^2}{\sqrt{EI/\rho A}}$ cps
$v(x) = a\,(x/L)^2$	0.7118	n.a.
$v(x) = a_1\,(x/L)^2 + a_2\,(x/L)^3$	0.5623	5.5397
Exact (NASA 1968: 3–124)	0.560	3.507

1.6 Galerkin's Method

In some problems, an energy form is not readily available or does not exist. Rather, a differential equation is derived based on conservation laws and is used as the starting point for deriving the needed matrices. Galerkin's method uses the set of governing equations in the development of an integral form. It belongs to the category of weighted residual methods. We will initiate our discussion by considering a general representation of a governing equation on a region V:

$$Lu = f \tag{1.16}$$

where L is a differential operator. For example, in a 1D heat conduction problem, to be discussed subsequently via Example 1.5, the governing equation is

$$-\frac{d}{dx}\left(k\,\frac{dT}{dx}\right) = Q \tag{1.17}$$

where $T(x)$ is the temperature field, $k(x)$ is thermal conductivity, and $Q(x)$ is the heat source. The operator L that operates on T is then identified as

$$L = -\frac{d}{dx}\left(k\,\frac{d}{dx}\right) \tag{1.18}$$

The exact solution needs to satisfy eq. (1.16) at every point x. If we seek an approximate solution $\tilde{u}$ it introduces an error $\varepsilon(x) = L\,\tilde{u} - f$, called the *residual.* The approximate methods revolve around setting the residual relative to a set of weighting functions $W_i\,(x)$ to zero as

$$\int_V W_i(L\tilde{u} - f)\,dV = 0 \qquad i = 1 \text{ to } n \tag{1.19}$$

The choice of the weighting function W_i leads to various approximation methods. *In Galerkin's method, the weighting functions are chosen from the basis functions used for constructing* $\tilde{u}$. For example, suppose $\tilde{u}$ has to satisfy a boundary condition $\tilde{u}(L) = 0$.

Then, assuming $\tilde{u} = a_1\,(x - L) + a_2\left(x^2 - L^2\right)$, weighting functions are chosen as $W_1 = (x - L)$ and $W_2 = \left(x^2 - L^2\right)$, and eq. (1.19) then furnishes two equations to solve for a_1 and a_2. This is the broad concept. The details involve an integration by parts that reduces the highest derivative appearing in the problem and produces terms where BCs may be imposed. This is easier to understand through examples.

Re-read the discussion on kinematically admissible displacement fields in the aforementioned statement of the minimum potential energy principle. In Galerkin's method, too, the Ritz approximation $\tilde{u}$ must be kinematically admissible, which ensures that it is sufficiently differentiable and satisfies essential BCs.

As the weighting function is chosen from the same basis as $\tilde{u}$, admissibility only requires that it satisfy corresponding homogeneous BCs. To elaborate,

$$\text{if} \quad u(0) = 100^\circ\text{C}, \text{then } W(0) = 0 \tag{1.20a}$$

$$\text{or if} \quad \beta_1\, u(x_1) + \beta_2\, u(x_2) = \beta_0, \text{then } \beta_1\, W(x_1) + \beta_2\, W(x_2) = 0 \tag{1.20b}$$

These follow from interpreting the weighting function as a virtual change in u. With this interpretation, $\tilde{u}(x) = u(x) + \varepsilon W(x)$ must also satisfy eq. (1.20) for any value of the (small) scalar ε. Thus,

$$\tilde{u}(0) = 100$$

Subtracting $\tilde{u}(0) = 100$ from $u(0) = 100$ gives $W(0) = 0$. Similarly, we have

$$\beta_1\, \tilde{u}(x_1) + \beta_2\, \tilde{u}(x_2) = \beta_0$$

Subtracting the above from $\beta_1\, u(x_1) + \beta_2\, u(x_2) = \beta_0$, we get $\beta_1\, W(x_1) + \beta_2\, W(x_2) = 0$

Example 1.5

Heat is generated in a large plate ($k = 0.8$ W/m °C) at the rate of $Q = 4000$ W/m^3. The plate is 25 cm thick. The outside surfaces of the plate are exposed to ambient air at $T_\infty = 30$ °C, with a convective heat transfer coefficient of $h = 20$ W/m^2 °C. Determine the temperature distribution in the wall. Use Galerkin's approach and a quadratic polynomial approximation for the temperature field (see Fig. E1.5).

Solution

The problem is symmetric about the centerline of the plate. In the half-symmetry model, the left end is insulated as no heat can flow across the symmetry line. We have $L = 12.5$ cm $= 0.125$ m, $0 \le x \le L$. We consider a 1×1 m area in the direction of heat flow. Heat conservation in the control volume gives the BVP:

Example 1.5 (cont.)

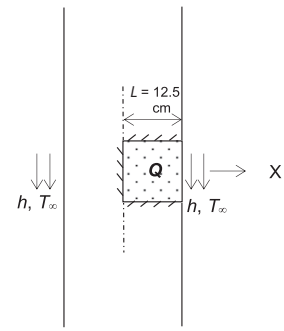

Figure E1.5

$$
\begin{aligned}
&-\frac{d}{dx}\left(k\,\frac{dT}{dx}\right) = Q \\
&-k\,\frac{dT}{dx}(0) = 0 \\
&-k\,\frac{dT}{dx}(L) = h\;\;(T(L) - T_\infty)
\end{aligned}
\tag{a}
$$

Following the procedure outlined above, we multiply the differential equation by a weighting function $w(x)$ and integrate to get

$$
-k\int_0^L w(x)\,\frac{d^2T}{dx^2}\,dx = \int_0^L w(x)\;Q\,dx \tag{b}
$$

Integrating by parts as

$$
\begin{aligned}
\int_0^L w(x)\,\frac{d^2T}{dx^2}\,dx &= \int_0^L w(x)\,d\left(\frac{dT}{dx}\right) = \\
&= w\,\frac{dT}{dx}\bigg|_0^L - \int_0^L \frac{dw}{dx}\,\frac{dT}{dx}\,dx \\
&= w(L)\,\frac{dT}{dx}(L) - w(0)\,\frac{dT}{dx}(0) - \int_0^L \frac{dw}{dx}\,\frac{dT}{dx}\,dx
\end{aligned}
\tag{c}
$$

Example 1.5 (cont.)

Upon substituting the BCs, using eqs. (a)–(c), we get the *weak form*

$$w(L)\,h\,(T(L) - T_\infty) + k\int_0^L \frac{dw}{dx}\,\frac{dT}{dx}\;dx = Q\int_0^L w(x)\,dx \tag{d}$$

We are looking for T such that eq. (b) holds for every C^0 continuous function $w(x)$ on [0, L]. Equations (a) and (b) are equivalent. Importantly, only dT/dx appears in the weak form, while d^2T/dx^2 appears in the original problem. That is, the restriction on the differentiability on T is weaker than in the original *strong form* in eq. (a).

> This is advantageous, particularly in 2D and 3D problems, since it suffices for the approximating function for T to be continuous rather than its derivative also being continuous. Recall that energy expressions in earlier examples also involved a lesser-order derivative and thus benefited from a weaker restriction on the field variable.

In this example, there are no specified temperatures (that is, no essential BCs) – the BCs in (a) are called *natural*, and place no restriction on choice of $w(x)$. At this stage, after developing the weak form, we introduce a Ritz approximation:

$$T(x) = a_0 + a_1\,x$$

As per Galerkin's approach, the weighting function $w(x)$ is chosen as

$$w(x) = w_0 + w_1\,x$$

Note that $T(L) = a_0 + a_1\,L$ and $w(L) = w_0 + w_1\,L$. Both w_0 and w_1 are arbitrary. Substituting for $T(x)$ and $w(x)$ into the weak form gives

$$w_0\,\{h(a_0 + a_1\,L - T_\infty) - Q\,L\} + w_1\,\{h\,L(a_0 + a_1\,L - T_\infty) + k\,a_1\,L - Q\,L^2/2\} = 0$$

Letting $w_0 = 1$ and $w_1 = 0$, and then again $w_0 = 0$ and $w_1 = 1$, gives us two equations for the two unknowns, a_0 and a_1, as

$$\begin{bmatrix} h & h\,L \\ h\,L & h\,L^2 + k\,L \end{bmatrix}\begin{bmatrix} a_0 \\ a_1 \end{bmatrix} = \begin{bmatrix} Q\,L + h\,T_\infty \\ h\,L\,T_\infty + Q\,L^2/2 \end{bmatrix}$$

solving, $a_0 = 94.06$, $a_1 = -312.5$. Thus, $T(0) = a_0 = 94.06\,^\circ\text{C}$ and $T(L) = a_0 + a_1\,L = 55\,^\circ\text{C}$.

It will be even more cumbersome to try a quadratic polynomial approximation. The FE approach to heat conduction is presented in Chapters 4 and 8, and is far more attractive.

Example 1.6

Consider the differential equation

$$\frac{du}{dx} + 2u = 1, \quad 0 < x < 1 \tag{a}$$

together with the initial condition $u(0) = 1$. Note that $u(0)$ refers to the value of u at $x = 0$. The first step is to develop the weak form. Thus, setting the weighted residual equal to zero gives

$$\int_0^1 w(x)\left(\frac{du}{dx} + 2u - 1\right)dx = 0$$
$$w(0) = 0.$$

Note the integration by parts step:

$$\int_0^1 w\frac{du}{dx}dx = -\int_0^1 u\frac{dw}{dx}dx + w(1)u(1) - w(0)u(0)$$

Since $u(0) = 1$ and $w(0) = 0$, we have the weak form

$$-\int_0^1 u\frac{dw}{dx}dx + w(1)u(1) + 2\int_0^1 wudx - \int_0^1 wdx = 0 \tag{b}$$

We are looking for u such that eq. (b) holds for all admissible w. Introducing an approximation,

$$u = a + bx + cx^2$$

The essential BC on u gives $a = 1$. Thus,

$$u = 1 + bx + cx^2 \tag{c}$$

Galerkin's method requires w belonging to the same basis with $w(0) = 0$, as per eq. (1.20a). Thus,

$$w = Bx + Cx^2 \tag{d}$$

where B and C are arbitrary. Substituting eqs. (c) and (d) into (b) yields an equation of the form

$$Bf(a, b) + Cg(a, b) = 0$$

which must be true for arbitrary values of B and C (one may set $B = 1$, $C = 0$ and $B = 1$, $C = 0$). This implies that $f(a, b) = 0$ and $g(a, b) = 0$. The equations are

Example 1.6 (cont.)

$$\begin{bmatrix} 1.1667 & 1.1667 \\ 0.8333 & 0.9 \end{bmatrix} \begin{bmatrix} b \\ c \end{bmatrix} = \begin{bmatrix} -0.5 \\ -0.3333 \end{bmatrix}$$

On solving, we get $b = -0.7857$, $c = 0.3571$. We can compute the value of u for a given x using $u = 1 + bx + cx^2 : u(0.5) = 0.6964, u(1) = 0.5714$.

Example 1.7

A time-dependent example is now presented via Galerkin's approach (Cengel 2008). Large brass plates, 4 cm thick, that are initially at a uniform temperature of 25 °C are heated by passing them through an oven that is maintained at 450 °C. Determine the surface temperature of the plates when they come out of the oven after 8 minutes.

Data: $h = 120$ W/(m^2·°C), $k = 110$ W/(m·°C), $\alpha = 33.9 \times 10^{-6}$ m^2/s.

Solution

As in Example 1.5, a half-symmetry model is created here. In fact, Fig. E1.5 captures the essence of this problem as well. Here, $L = 4/2 = 2$ cm $= 0.02$ m. A plane of symmetry implies that no heat can flow across it (i.e., it is insulated). With $0 \le x \le L$, the BVP in terms of the temperature function $u(x, t)$ is

$$\begin{aligned}
&\frac{\partial^2 u}{\partial x^2} = \frac{1}{\alpha}\frac{\partial u}{\partial t} && x \in (0, L),\ t > 0 \\
&u(x, 0) = 25 && \text{(initial condition)} \\
&\frac{\partial u}{\partial x}(0, t) = 0 && \text{(insulated since } x = 0 \text{ is a plane of symmetry)} \\
&-k\frac{\partial u}{\partial x}(L, t) = h\,(u(L, t) - u_\infty) && \text{(convection on plane } x = L)
\end{aligned} \tag{a}$$

Setting the weighted residual equal to zero gives

$$\int_0^L w(x)\frac{\partial^2 u}{\partial x^2}\,dx = \frac{1}{\alpha}\int_0^L w(x)\frac{\partial u}{\partial t}\,dx$$

Integrating by parts and noting the natural BCs in eq. (a), we obtain the weak form where we are to determine u from

Example 1.7 (cont.)

$$w(L) \cdot \frac{-h}{k}(u(L) - u_\infty) - \int_0^L \frac{\partial w}{\partial x}\frac{\partial u}{\partial x}\,dx = \frac{1}{\alpha}\int_0^L w(x)\,\frac{\partial u}{\partial t}\,dx \tag{b}$$

which holds for all smooth w. A simple linear approximation is assumed here to keep calculations simple:

$$u(x,t) = a_0(t) + a_1(t)\,x \tag{c}$$

Thus, $\partial u/dx = a_1$, $\partial u/\partial t = \dot{a}_0 + \dot{a}_1\,x$, $u(L,t) = a_0(t) + a_1(t)\,L$. The initial conditions imply that

$$a_0(0) = 25, a_1(0) = 0 \tag{d}$$

The weighting function, a function of x only, is

$$w(x) = w_0 + w_1\,x \tag{e}$$

Thus, we are to determine a_0 and a_1 from eq. (b) with w_0 and w_1 both arbitrary. Doing the integrations, and letting $w_0 = 1$, $w_1 = 0$, and then again $w_0 = 0$, $w_1 = 1$ gives us two ordinary differential equations (ODEs) expressed in matrix form as

$$\frac{L}{\alpha}\begin{bmatrix} 1 & L/2 \\ L/2 & L^2/3 \end{bmatrix}\begin{bmatrix} \dot{a}_0 \\ \dot{a}_1 \end{bmatrix} = -\begin{bmatrix} h/k & hL/k \\ hL/k & (L + hL^2/k) \end{bmatrix}\begin{bmatrix} a_0 \\ a_1 \end{bmatrix} + \frac{hu_\infty}{k}\begin{bmatrix} 1 \\ L \end{bmatrix} \tag{f}$$

Using a MATLAB® ODE solver gives $a_0(t)$ and $a_1(t)$. From the output, $u(L, t)$ at $t = 8$ min = 480 s equals 275 °C.

MATLAB® Code Used in Example 1.7

```
function [] = Example_1_7_transient_heat()
close all; clear all;
global alp uinf L h k
alp = 33.9e-6; uinf = 450; h = 120; k=110; L = 2e-2; u0=25;
tau = 40*60; % sec
[t1,y] = ode45(@odefun,[0 tau],[u0 0]);
usurf_t= y(:,1) + L*y(:,2);
usurf_8min = interp1(t1,usurf_t,8*60)
plot(t1,usurf_t,'b')
hold
plot([480 480],[0 300]);
legend('surface temperature');

function [f] = odefun(t,y)
global alp uinf L h k
```

Example 1.7 (cont.)

```
M = L/alp*[1 L/2;L/2 L^2/3];
K = -[h/k h*L/k;h*L/k (L+h*L^2/k)];
F = h/k*uinf*[1 L]';
f = inv(M)*(K*y+F);
```

1.7 Linearity, Symmetry, and Positive Definiteness

In Examples 1.3–1.5, by both energy and Galerkin methods, the simultaneous equations involved in solving for the unknown Ritz parameters $\{a_i\}$ were *linear* and, further, the coefficient matrix was *symmetric*. To understand why, we can look at either the energy functional or at the differential equation. A quadratic energy functional, upon substituting the Ritz approximation, will result in a quadratic function involving a_i, whose derivatives with respect to a_i will be linear equations. Further, the quadratic term will be symmetric with respect to a_i or can be written in a symmetric form, since $\mathbf{x}^{\mathrm{T}}\mathbf{Q}\mathbf{x} = \mathbf{x}^{\mathrm{T}}\left(\frac{\mathbf{Q}+\mathbf{Q}^{\mathrm{T}}}{2}\right)\mathbf{x}$. Looking at this from a differential equation point of view, consider the differential operator L in eq. (1.16). Linearity follows from

$$L(\alpha u + \beta v) = \alpha L(u) + \beta L(v) \tag{1.21}$$

and symmetry follows from "self-adjointness," where

$$\int_0^L u\, L\, v\, dx = \int_0^L v\, L\, u\, dx \tag{1.22}$$

for all u and $v \in \mathrm{D_L}$ = domain of L.

In Example 1.5, eq. (1.18), the operator is

$$L = -\frac{d}{dx}\left(k\frac{d}{dx}\right)$$

with $\mathrm{D_L}$ = space of all differentiable functions on [0, L] (i.e., $u \in \mathrm{C}^1$), which leads to a symmetric term in the weak form, namely $k\int_0^L \frac{dw}{dx}\frac{dT}{dx}\,dx$. The coefficient matrix involved in solving for the parameters of the approximating function,

$$\begin{bmatrix} h & hL \\ hL & hL^2 + kL \end{bmatrix}$$

was consequently symmetric. One can readily verify self-adjointness since $\int_0^L v\,Lu\,dx = \int_0^L k\,v'\,u'\,dx = \int_0^L u\,Lv\,dx$, where boundary terms are ignored since the focus